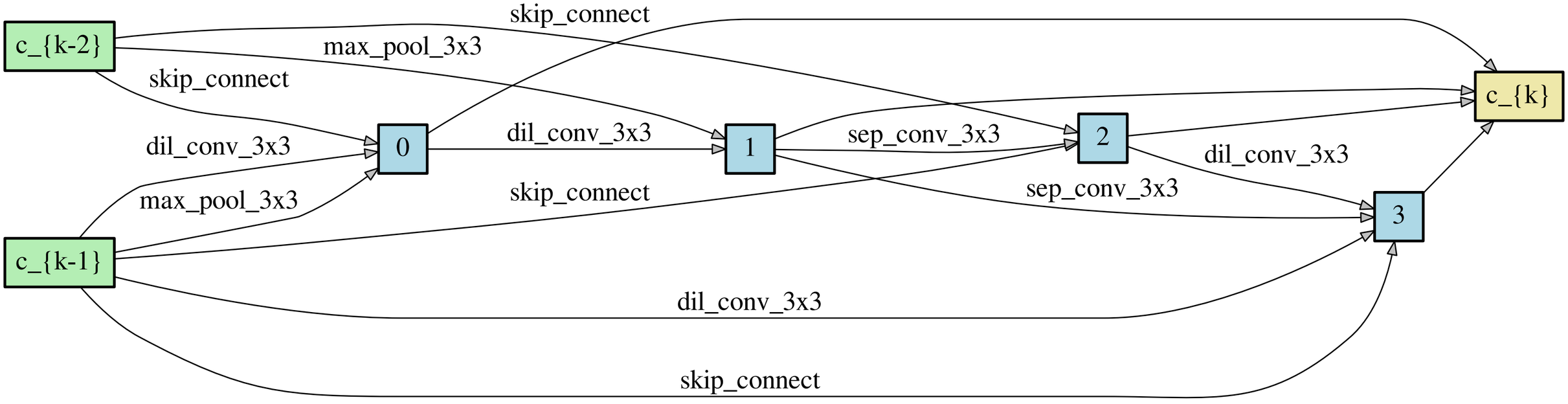
c_{k-2}
c_{k-1}
0
1
2
3
c_{k}
skip_connect
max_pool_3x3
skip_connect
dil_conv_3x3
max_pool_3x3
dil_conv_3x3
skip_connect
sep_conv_3x3
sep_conv_3x3
dil_conv_3x3
dil_conv_3x3
skip_connect